ELITE STORM SYSTEMS

700 S. JOHN RODES BLVD.
MELBOURNE, FL 32904
PH. 321.690.1976

THE ULTIMATE STORM PANEL
GALVANIZED STEEL

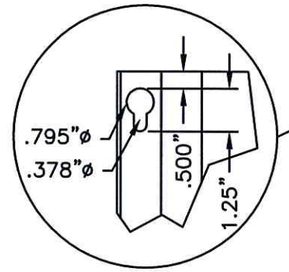

TYP. KEYHOLE PUNCH DETAIL
IN PANEL FOR INSTALLATION

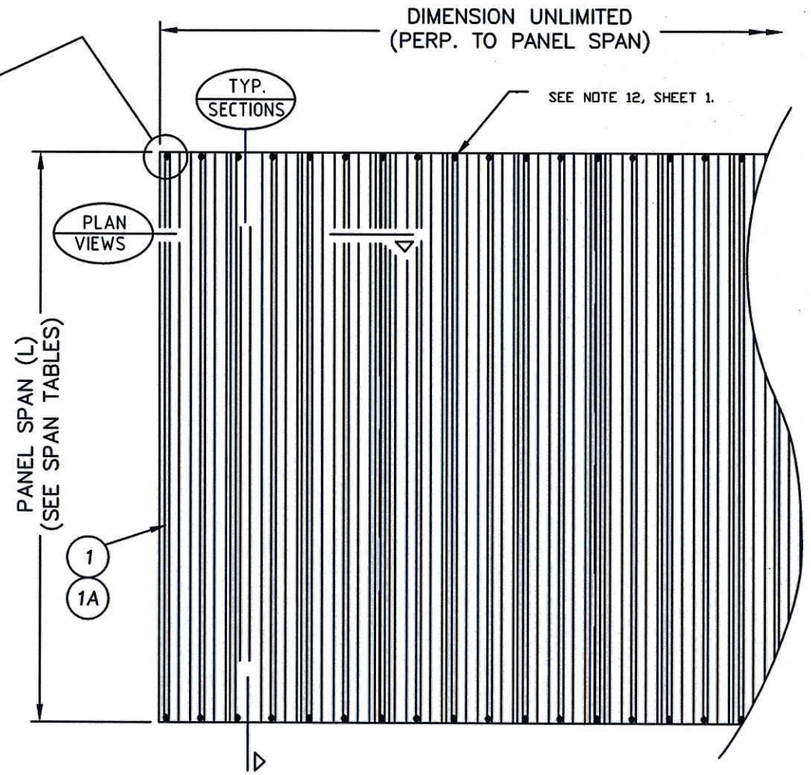

General Notes:

1. *This system has been tested and evaluated as a large missile impact protective system in accordance with the requirements of the 2010 Florida Building Code (FBC) excluding the High Velocity Hurricane Zone. This product meets missile level "D" and includes Wind Zone 4 as defined in ASTM E 1996 and FBC Section 1609.1.2.4.*
2. *Positive and negative design pressures to be used with these drawings shall be determined by others for specific sites in accordance with the local governing code.*
3. *The system detailed herein is generic and does not provide information for a specific site. If site conditions deviate from the conditions detailed herein, a licensed engineer or registered architect shall prepare site specific documents to be used in conjunction with this document.*
4. *Product markings shall be rolled into each panel with spacing in between marking no greater than 36" and shall be labeled as follows:*

   Elite Storm Systems
   Rockledge, FL
   FBC Approval FL#10106.2
   ASTM E 330-02
   ASTM E 1886/1996-02 Missile Level D

5. *Galvanized steel storm panels shall be ASTM A653 SS Grade 80, 80 ksi minimum yield strength, tested thickness 0.022".*
6. *All extrusions shall be 6063-T6 aluminum alloy, unless noted otherwise.*
7. *All bolts & washers shall be zinc coated steel, galvanized steel, stainless steel, or 2024-T4 aluminum alloy with a minimum tensile yield strength of 33 ksi.*
8. *Permit holder shall verify the adequacy of the existing structure to withstand new superimposed loads.*
9. *Storm panels have been designed and tested to the maximum spans and loads shown on these drawings.*
10. *Top & bottom details shown may be interchanged as field conditions dictate. Panels may be mounted horizontally where applicable.*
11. *Panel attachment to studded angle (item #5) mounting hardware is at 12-1/2" o.c. maximum. All other panel attachments to mounting hardware are at 6-1/4" o.c. maximum. Direct mount of panel to structure is at 6-1/4" o.c. maximum.*

TABLE OF CONTENTS

SHEET #	DESCRIPTION
1	TYPICAL ELEVATIONS AND GENERAL NOTES
2	TYPICAL CLOSURE DETAILS
3	VERTICAL CROSS SECTIONS
4	VERTICAL CROSS SECTIONS
5	VERTICAL CROSS SECTIONS
6	ANCHORING SCHEDULE – CONCRETE
7	ANCHORING SCHEDULE – HOLLOW BLOCK
8	ANCHORING SCHEDULE – WOOD
9	BILL OF MATERIALS & COMPONENTS

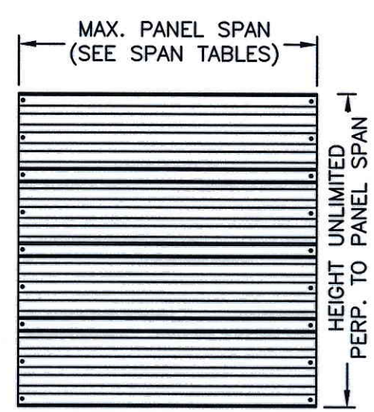

TYPICAL HORIZONTAL INSTALLATION

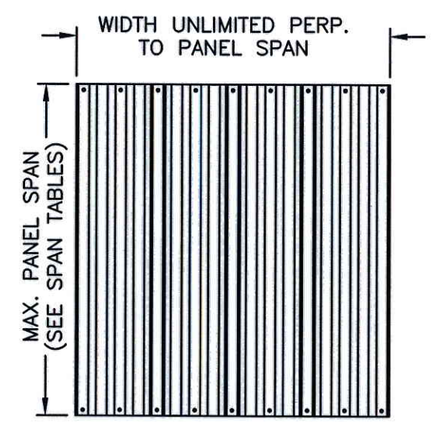

TYPICAL VERTICAL INSTALLATION

Documents Prepared By:
RW BUILDING CONSULTANTS, INC.
P.O. Box 230 Valrico FL. 33595
Phone No.: 813.659.9197
Florida Board of Professional Engineers
Certificate Of Authorization No. 9813
Lyndon F. Schmidt, P.E. NO. 43409

PRODUCT: ELITE HURRICANE SHUTTERS GALV. STEEL STORM PANEL

PART OR ASSEMBLY: TYPICAL ELEVATIONS AND GENERAL NOTES

NO.	DATE	REVISIONS	BY
1	05/22/12	UPDATE TO 2010 FBC	LFS

DATE: 2/4/08
SCALE: N.T.S.
DWG. BY: EW
CHK. BY: LFS
DRAWING NO.: FL-10106.2
SHEET 1 OF 9

© 2008 R.W. BUILDING CONSULTANTS INC.

R:\A - Projects\Project Folders\Proj 1301-1400\PF 1304\D. RWBC Drawings\2010 FBC\FL-10106.dwg, FL-10106.2

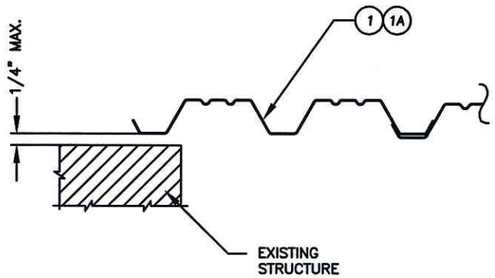

WALL MOUNT

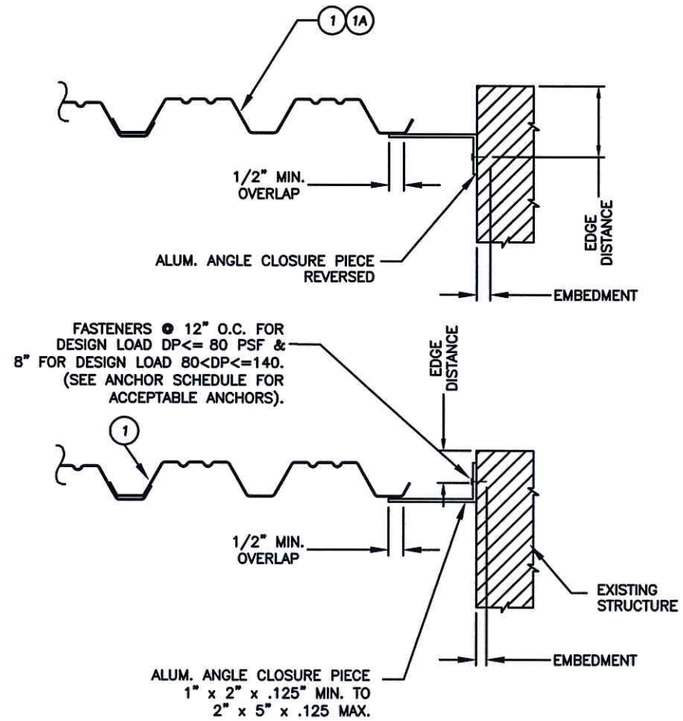

TRAP MOUNT

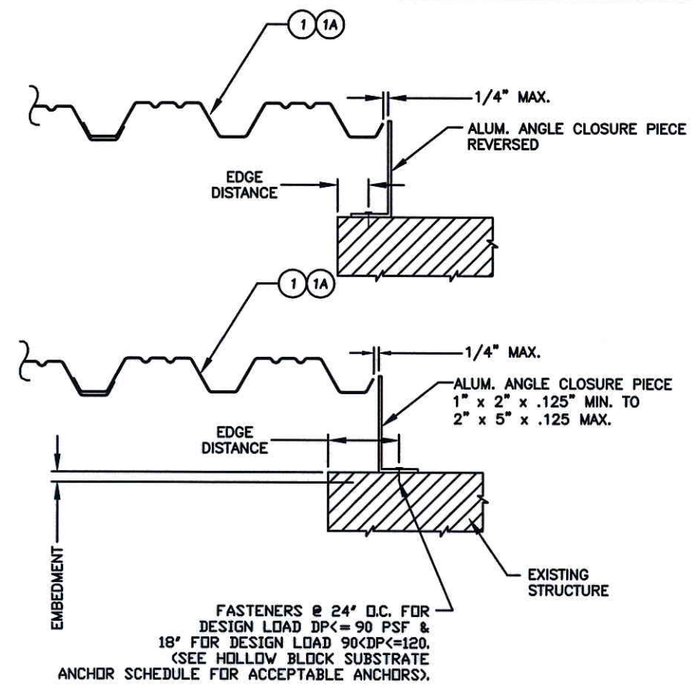

BUILD-OUT

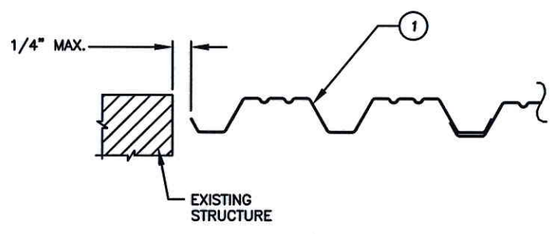

TRAP MOUNT

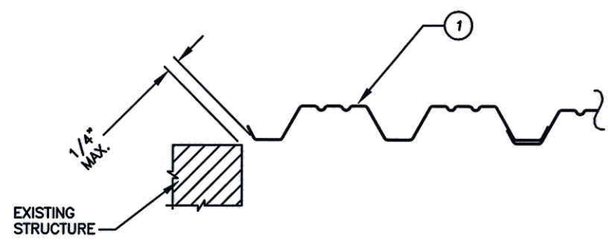

FACE MOUNT

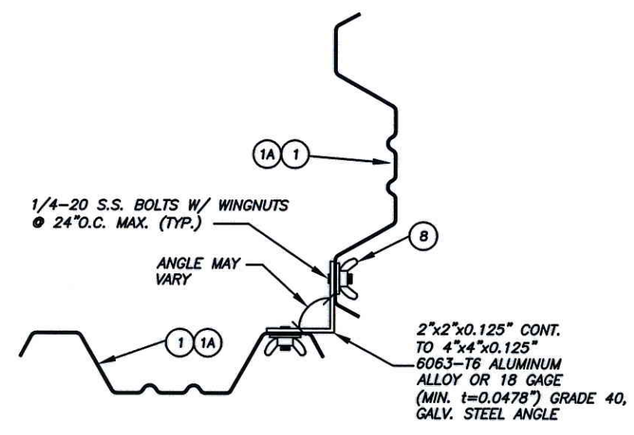

ALT CORNER DETAIL

TYPICAL CLOSURE DETAILS (PLAN VIEWS)

Documents Prepared By:
RW BUILDING CONSULTANTS, INC.
P.O. Box 230 Valrico FL. 33595
Phone No.: 813.659.9197
Florida Board of Professional Engineers
Certificate Of Authorization No. 9813
5.31.12
Lyndon F. Schmidt, P.E. NO. 43409

PRODUCT: ELITE HURRICANE SHUTTERS GALV. STEEL STORM PANEL

PART OR ASSEMBLY: TYPICAL CLOSURE DETAILS

NO.	DATE	BY
1	05/22/12	LFS
	UPDATE TO 2010 FBC	

REVISIONS

DATE: 11/25/07
SCALE: N.T.S.
DWG. BY: EW
CHK. BY: LFS
DRAWING NO.: FL-10106.2
SHEET 2 OF 9

© 2008 R.W. BUILDING CONSULTANTS INC.

R:\A - Projects\Project Folders\Proj 1301-1400\PF 1304\D. RWBC Drawings\2010 FBC\FL-10106.dwg, 2.2

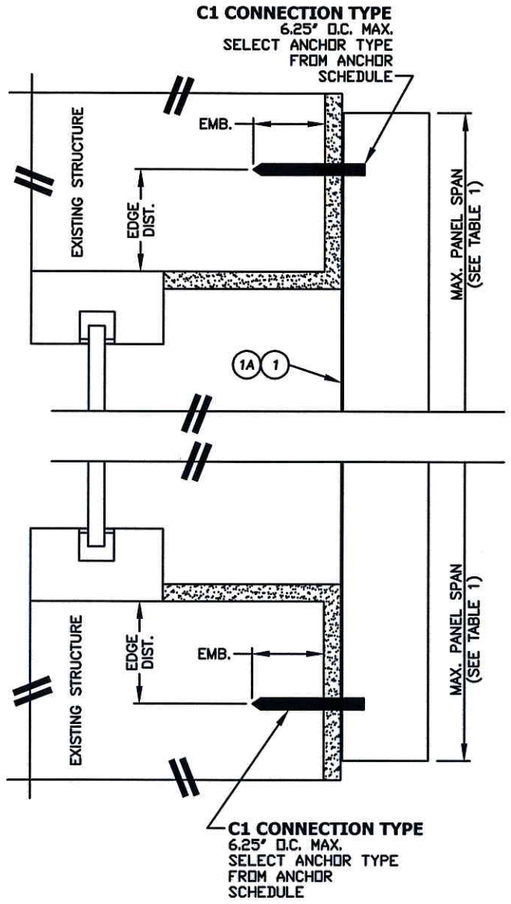

1 DIRECT MOUNT SECTION

TABLE 1 - PANEL SPAN
DIRECT MOUNT
ALLOWABLE DESIGN PRESSURES

PANEL SPAN (in)	ALLOWABLE DESIGN PRESSURE (+) PSF	ALLOWABLE DESIGN PRESSURE (-) PSF
144.0	50.0	50.0
132.0	52.5	52.5
120.0	56.0	56.0
108.0	59.0	59.0
106.0	60.0	60.0
96.0	66.0	66.0
84.0	75.5	75.5
72.0	88.0	88.0
60.0	106.0	106.0
0-53.0	120.0	120.0

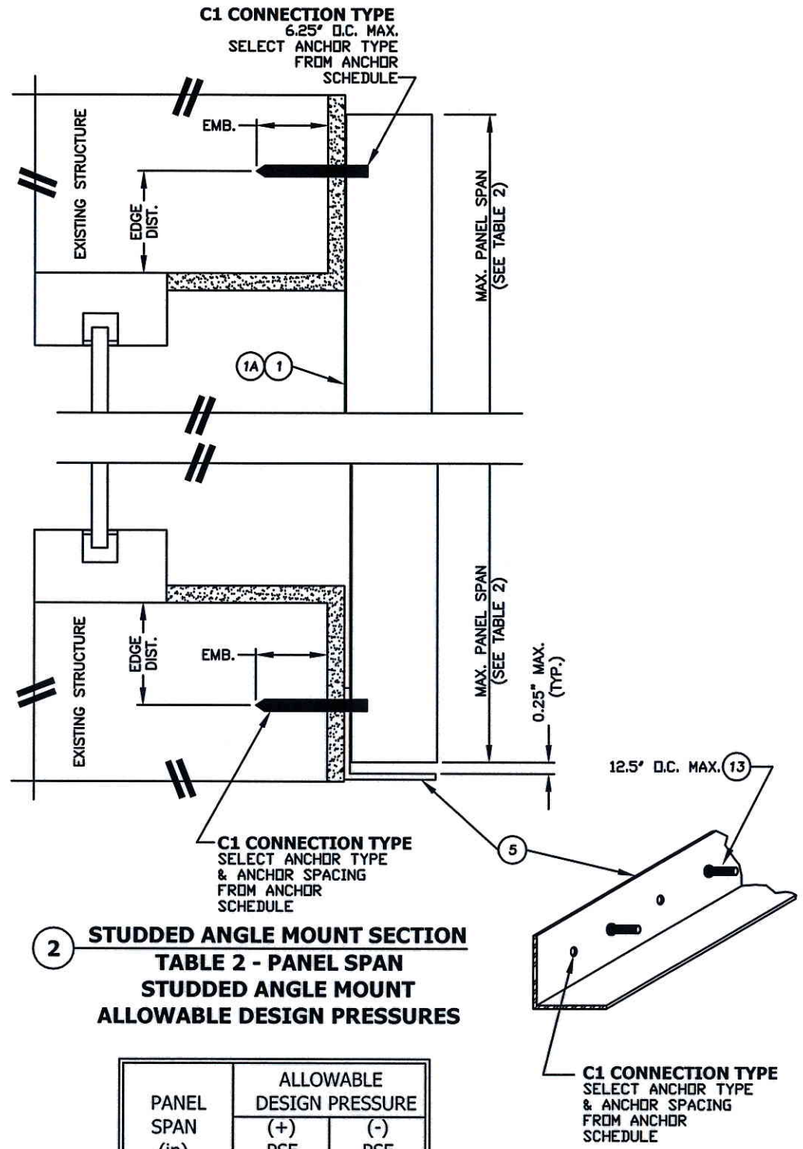

2 STUDDED ANGLE MOUNT SECTION

TABLE 2 - PANEL SPAN
STUDDED ANGLE MOUNT
ALLOWABLE DESIGN PRESSURES

PANEL SPAN (in)	ALLOWABLE DESIGN PRESSURE (+) PSF	ALLOWABLE DESIGN PRESSURE (-) PSF
106.0	40.0	40.0
96.0	46.5	46.5
84.0	57.0	57.0
72.0	72.5	72.5
60.0	97.5	97.5
0-53.0	120.0	120.0

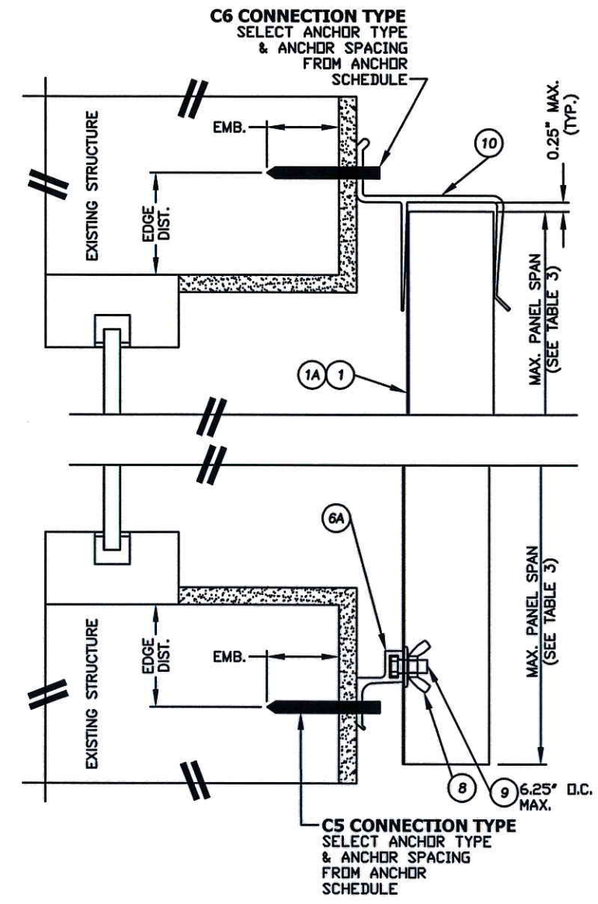

3 1" "F" HEADER + 1" OFFSET "F" TRACK MOUNT SECTION

TABLE 3 - PANEL SPAN
1" "F" HEADER + 1" OFFSET "F" TRACK MOUNT
ALLOWABLE DESIGN PRESSURES

PANEL SPAN (in)	ALLOWABLE DESIGN PRESSURE (+) PSF	ALLOWABLE DESIGN PRESSURE (-) PSF
106.0	40.0	40.0
96.0	45.0	45.0
84.0	53.5	53.5
72.0	65.5	65.5
60.0	84.0	84.0
0-53.0	100.0	100.0

Documents Prepared By:
RW BUILDING CONSULTANTS, INC.
P.O. Box 230 Valrico FL 33595
Phone No.: 813.659.9197
Florida Board of Professional Engineers
Certificate Of Authorization No. 9813
Lyndon F. Schmidt, P.E. No. 43409

PRODUCT: ELITE HURICANE SHUTTERS GALV. STEEL STORM PANEL

PART OR ASSEMBLY: VERTICAL CROSS SECTIONS

NO.	DATE	BY
1	05/22/12	LFS

REVISIONS: UPDATE TO 2010 FBC

DATE: 2/4/08
SCALE: N.T.S.
DWG. BY: EW
CHK. BY: LFS
DRAWING NO.: FL-10106.2
SHEET 3 OF 9

© 2008 R.W. BUILDING CONSULTANTS INC.

R:\A - Projects\Project Folders\Proj 1301-1400\PF 1304\D. RWBC Drawings\2010 FBC\FL-10106.dwg, 3.2

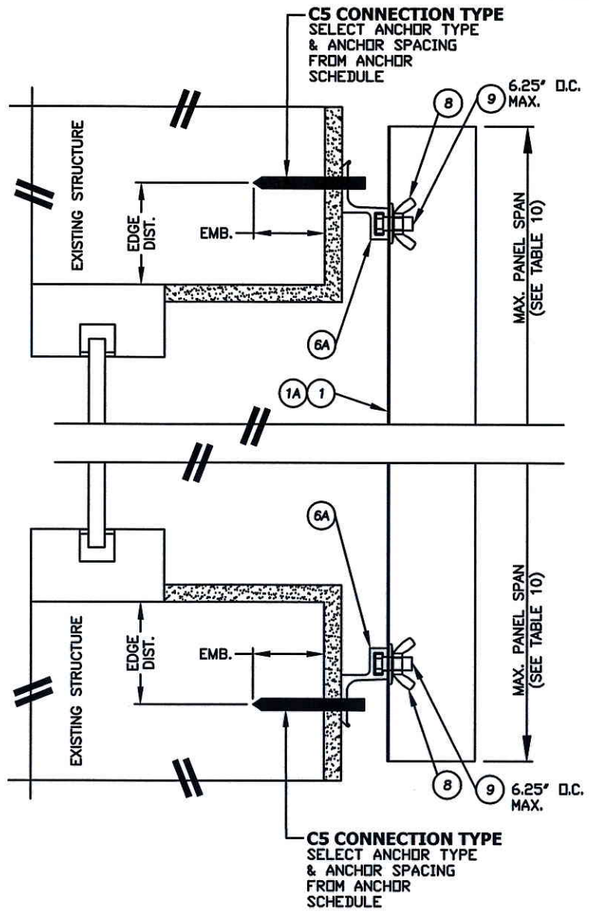

4 **1" OFFSET "F" TRACK MOUNT**

TABLE 10 - PANEL SPAN
1" OFFSET "F" TRACK MOUNT
ALLOWABLE DESIGN PRESSURES

PANEL SPAN (in)	ALLOWABLE DESIGN PRESSURE (+) PSF	ALLOWABLE DESIGN PRESSURE (-) PSF
106.0	40.0	40.0
96.0	45.0	45.0
84.0	53.5	53.5
72.0	65.5	65.5
60.0	84.0	84.0
0-53.0	100.0	100.0

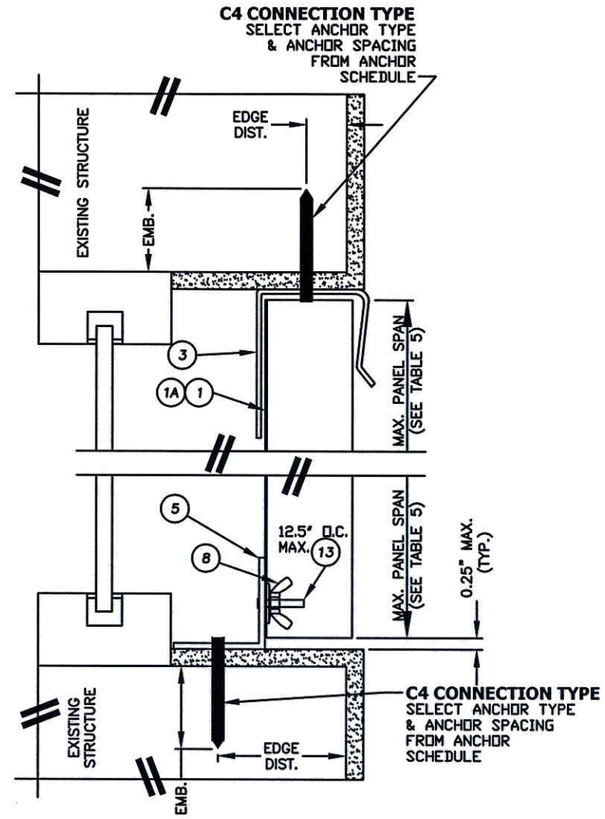

5 **"U" HEADER + STUDDED ANGLE MOUNT SECTION**

TABLE 5 - PANEL SPAN
"U" HEADER + STUDDED ANGLE MOUNT
ALLOWABLE DESIGN PRESSURES

PANEL SPAN (in)	ALLOWABLE DESIGN PRESSURE (+) PSF	ALLOWABLE DESIGN PRESSURE (-) PSF
106.0	40.0	40.0
96.0	46.5	46.5
84.0	57.0	57.0
72.0	72.5	72.5
60.0	97.5	97.5
0-53.0	120.0	120.0

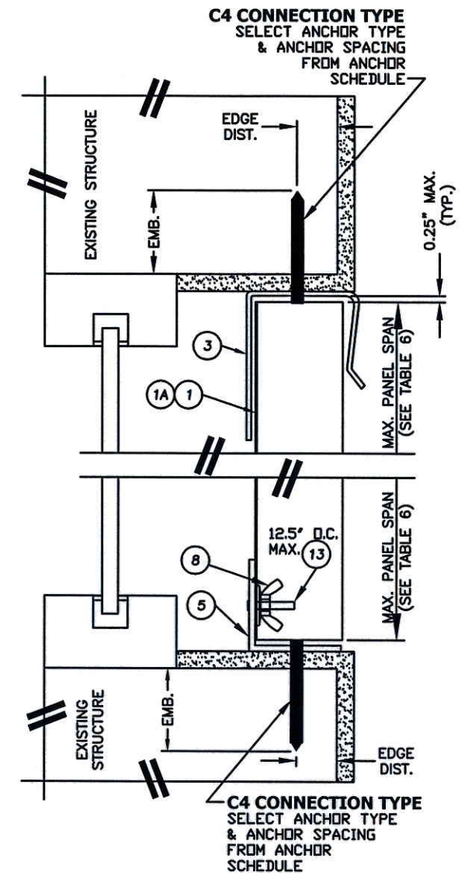

6 **"U" HEADER + STUDDED ANGLE MOUNT SECTION**

TABLE 6 - PANEL SPAN
"U" HEADER + STUDDED ANGLE MOUNT
ALLOWABLE DESIGN PRESSURES

PANEL SPAN (in)	ALLOWABLE DESIGN PRESSURE (+) PSF	ALLOWABLE DESIGN PRESSURE (-) PSF
106.0	40.0	40.0
96.0	46.5	46.5
84.0	57.0	57.0
72.0	72.5	72.5
60.0	97.5	97.5
0-53.0	120.0	120.0

Documents Prepared By:
RW BUILDING CONSULTANTS, INC.
P.O. Box 230 Valrico FL. 33595
Phone No.: 813.659.9197
Florida Board of Professional Engineers
Certificate Of Authorization No. 9813
Lyndon F. Schmidt, P.E. No. 43409

PRODUCT: ELITE HURICANE SHUTTERS GALV. STEEL STORM PANEL

PART OR ASSEMBLY: VERTICAL CROSS SECTIONS

REVISIONS

NO.	DATE	BY
1	05/22/12 UPDATE TO 2010 FBC	LFS

DATE: 2/4/08
SCALE: N.T.S.
DWG. BY: EW
CHK. BY: LFS
DRAWING NO.: FL-10106.2
SHEET 4 OF 9

© 2008 R.W. BUILDING CONSULTANTS INC.

R:\A - Projects\Project Folders\Proj 1301-1400\PF 1304\D. RWBC Drawings\2010 FBC\FL-10106.dwg, 4.2

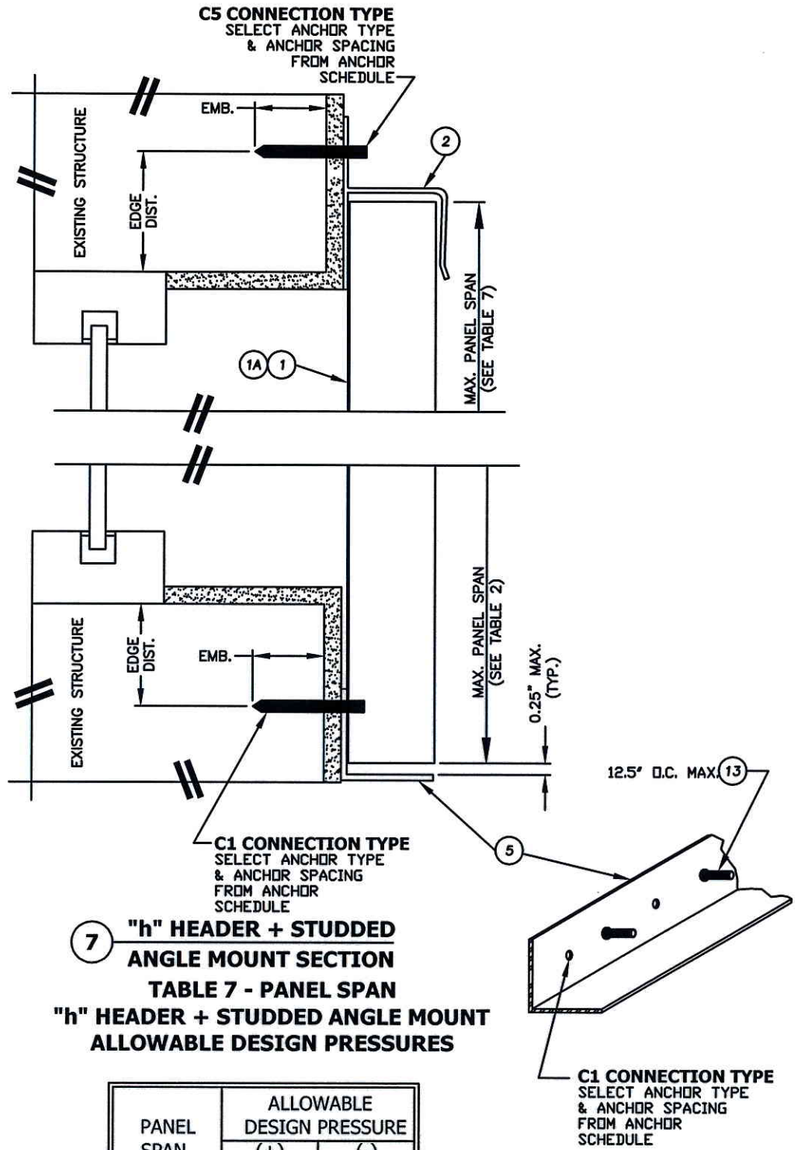

7 "h" HEADER + STUDDED ANGLE MOUNT SECTION

TABLE 7 - PANEL SPAN
"h" HEADER + STUDDED ANGLE MOUNT
ALLOWABLE DESIGN PRESSURES

PANEL SPAN (in)	ALLOWABLE DESIGN PRESSURE (+) PSF	ALLOWABLE DESIGN PRESSURE (-) PSF
106.0	40.0	40.0
96.0	45.0	45.0
84.0	53.5	53.5
72.0	65.5	65.5
60.0	84.0	84.0
0-53.0	100.0	100.0

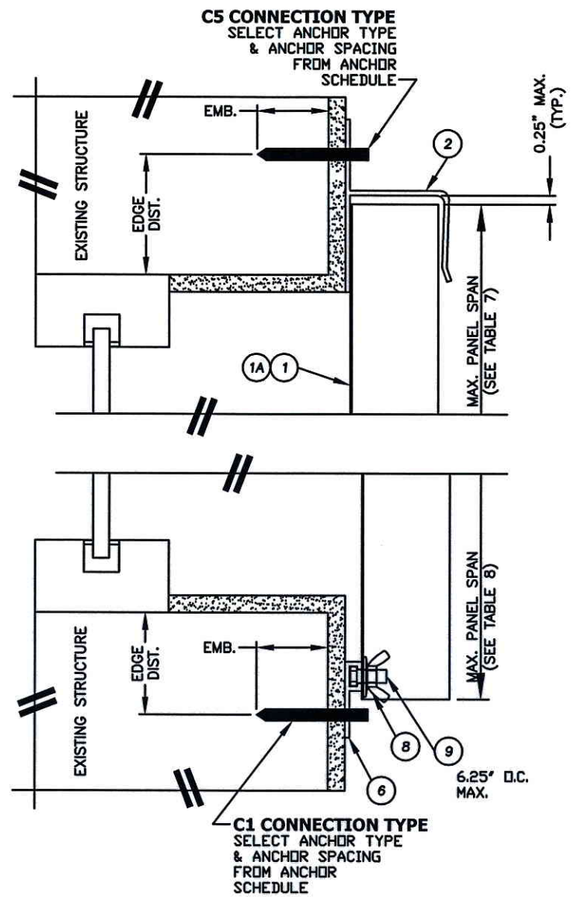

8 "h" HEADER + FLUSH "F" TRACK MOUNT SECTION

TABLE 8 - PANEL SPAN
"h" HEADER + FLUSH "F" TRACK MOUNT
ALLOWABLE DESIGN PRESSURES

PANEL SPAN (in)	ALLOWABLE DESIGN PRESSURE (+) PSF	ALLOWABLE DESIGN PRESSURE (-) PSF
106.0	40.0	40.0
96.0	45.0	45.0
84.0	53.5	53.5
72.0	65.5	65.5
60.0	84.0	84.0
0-53.0	100.0	100.0

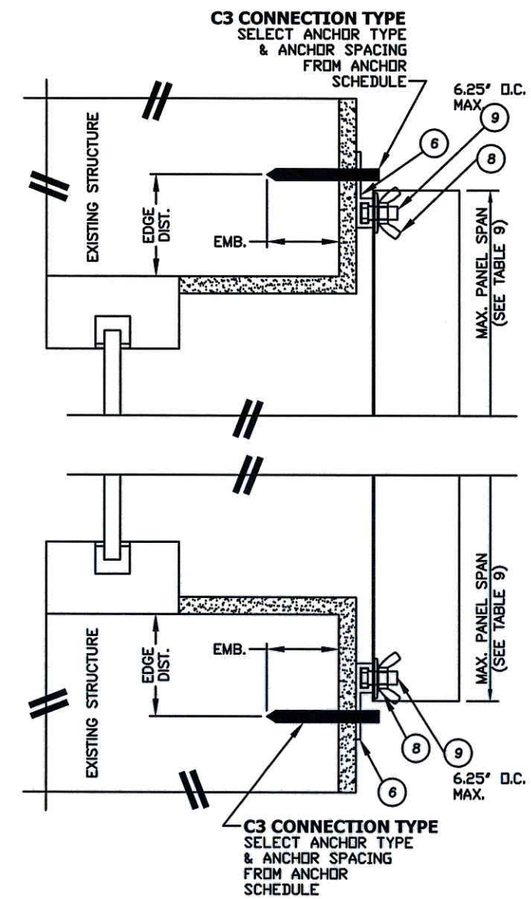

9 "F" TRACK MOUNT SECTION

TABLE 9 - PANEL SPAN
"F" TRACK MOUNT
ALLOWABLE DESIGN PRESSURES

PANEL SPAN (in)	ALLOWABLE DESIGN PRESSURE (+) PSF	ALLOWABLE DESIGN PRESSURE (-) PSF
106.0	40.0	40.0
96.0	45.0	45.0
84.0	53.5	53.5
72.0	65.5	65.5
60.0	84.0	84.0
0-53.0	100.0	100.0

Documents Prepared By:
R.W. BUILDING CONSULTANTS, INC.
P.O. Box 230 Valrico FL. 33595
Phone No.: 813.659.9197
Florida Board of Professional Engineers
Certificate Of Authorization No. 9813
Lyndon F. Schmidt, P.E. No. 43409

PRODUCT: ELITE HURICANE SHUTTERS GALV. STEEL STORM PANEL

PART OR ASSEMBLY: VERTICAL CROSS SECTIONS

NO.	DATE	BY
1	05/22/12	LFS
	UPDATE TO 2010 FBC	

REVISIONS

DATE: 2/4/08
SCALE: N.T.S.
DWG. BY: EW
CHK. BY: LFS
DRAWING NO.: FL-10106.2
SHEET 5 OF 9

© 2008 R.W. BUILDING CONSULTANTS INC.

R:\A - Projects\Project Folders\Proj 1301-1400\PF 1304\D. RWBC Drawings\2010 FBC\FL-10106.dwg, 5.2

ANCHOR SCHEDULE

FASTENER MAX. SPACING (IN.) REQ'D FOR VARIOUS DESIGN LOADS AND SPANS

EXISTING STRUCTURE	ANCHOR TYPE	INSTALLATION DETAILS: EDGE DISTANCE	LOAD PSF MAX. (SEE NOTE 1)	SPANS UP TO 53" (SEE NOTE 1) CONNECTION TYPE C1	C2	C3	C4	C5	C6	SPANS UP TO 106" (SEE NOTE 1) CONNECTION TYPE C1	C2	C3	C4	C5	C6	SPANS UP TO 144" (SEE NOTE 1) CONNECTION TYPE C1	C2	C3	C4	C5	C6
CONCRETE	1/4"ϕ ITW TAPCON EM = 1.75" CL = 3.0" Fc = 3192 PSI	ED = 2.5"	40	16.0	16.0	16.0	16.0	16.0	16.0	16.0	16.0	16.0	15.6	16.0	13.3	16.0					
			55	16.0	16.0	16.0	16.0	16.0	16.0	16.0	16.0	15.8	11.3	12.3	9.7	16.0					
			70	16.0	16.0	16.0	16.0	16.0	15.2	16.0	16.0	12.4	8.9	9.6	7.6	16.0					
			85	16.0	16.0	16.0	14.7	15.9	12.5	16.0	13.5	10.2	7.3	7.9	6.2	13.5					
			100	16.0	16.0	16.0	12.5	13.5	10.7	15.6	11.5	8.7	6.2	6.7	5.3	11.5					
			110	16.0	16.0	15.8	11.3	12.3	9.7	14.2	10.4	7.9	5.6	6.1	4.8	10.4					
			120	16.0	16.0	14.5	10.4	11.3	8.9	13.0	9.5	7.2	5.2	5.6	4.4	9.5					
	1/4"ϕ ELCO ULTRACON EM = 1.75" CL = 4.0" Fc = 2846 PSI	ED = 2.5"	40	16.0	16.0	16.0	16.0	16.0	16.0	16.0	16.0	16.0	15.6	14.0	11.0	16.0					
			55	16.0	16.0	16.0	16.0	16.0	16.0	16.0	16.0	13.1	11.3	10.1	8.0	16.0					
			70	16.0	16.0	16.0	16.0	16.0	12.6	16.0	13.5	10.3	8.9	8.0	6.3	13.5					
			85	16.0	16.0	16.0	14.6	13.1	10.4	15.1	11.1	8.4	7.3	6.5	5.2	11.1					
			100	16.0	16.0	14.4	12.4	11.2	8.8	12.9	9.5	7.2	6.2	5.6	4.4	9.5					
			110	16.0	16.0	13.1	11.3	10.1	8.0	11.7	8.6	6.5	5.6	5.0	4.0	8.6					
			120	16.0	15.8	12.0	10.4	9.3	7.3	10.7	7.9	6.0	5.2	4.6		7.9					
	1/4"ϕ ELCO MALE/ FEMALE "PANELMATE" EM = 2.0" CL = 3.0" Fc = 3350 PSI	ED = 2.5"	40	16.0	16.0	16.0	16.0	16.0	16.0	16.0	16.0	16.0	16.0	16.0	14.2	16.0					
			55	16.0	16.0	16.0	16.0	16.0	16.0	16.0	16.0	16.0	14.5	13.1	10.3	16.0					
			70	16.0	16.0	16.0	16.0	16.0	16.0	16.0	16.0	13.3	11.4	10.3	8.1	16.0					
			85	16.0	16.0	16.0	16.0	16.0	13.4	16.0	14.4	10.9	9.4	8.5	6.7	14.4					
			100	16.0	16.0	16.0	16.0	14.4	11.4	16.0	12.2	9.3	8.0	7.2	5.7	12.2					
			110	16.0	16.0	16.0	14.5	13.1	10.3	15.1	11.1	8.4	7.2	6.5	5.1	11.1					
			120	16.0	16.0	15.5	13.3	12.0	9.5	13.9	10.2	7.7	6.6	6.0	4.7	10.2					
	1/4"ϕ ITW "SAMMYS SSC" EM = 2.0" CL = 3.0" Fc = 3295 PSI	ED = 2.5"	40	16.0	16.0	16.0	16.0	16.0	16.0	16.0	16.0	16.0	16.0	16.0	16.0	16.0					
			55	16.0	16.0	16.0	16.0	16.0	16.0	16.0	16.0	16.0	13.1	15.4	12.2	16.0					
			70	16.0	16.0	16.0	16.0	16.0	16.0	16.0	16.0	15.6	10.3	12.1	9.5	16.0					
			85	16.0	16.0	16.0	16.0	16.0	15.7	16.0	16.0	12.8	8.4	10.0	7.8	16.0					
			100	16.0	16.0	16.0	14.4	16.0	13.4	16.0	14.4	10.9	7.2	8.5	6.7	14.4					
			110	16.0	16.0	16.0	13.1	15.4	12.2	16.0	13.1	9.9	6.5	7.7	6.1	13.1					
			120	16.0	16.0	16.0	12.0	14.1	11.1	16.0	12.0	9.1	6.0	7.0	5.5	12.0					
	5/16"ϕ ITW TAPCON XL EM = 1.75" CL = 3.75" Fc = 3000 PSI	ED = 3.0"	40	16.0	16.0	16.0	16.0	16.0	16.0	16.0	16.0	16.0	16.0	16.0	13.0	16.0					
			55	16.0	16.0	16.0	16.0	16.0	16.0	16.0	16.0	15.5	14.6	12.0	9.5	16.0					
			70	16.0	16.0	16.0	16.0	16.0	14.9	16.0	16.0	12.1	11.4	9.4	7.4	16.0					
			85	16.0	16.0	16.0	16.0	15.6	12.3	16.0	13.2	10.0	9.4	7.8	6.1	13.2					
			100	16.0	16.0	16.0	16.0	13.2	10.4	15.2	11.2	8.5	8.0	6.6	5.2	11.2					
			110	16.0	16.0	15.5	14.6	12.0	9.5	13.8	10.2	7.7	7.3	6.0	4.7	10.2					
			120	16.0	16.0	14.2	13.4	11.0	8.7	12.7	9.3	7.1	6.7	5.5	4.3	9.3					
	ALL POINTS 1/4"Ø SOLID SET EM = 0.875" CL = 3" Fc = 3000 PSI	ED = 2.0"	40	16.0	16.0	16.0	16.0	16.0	16.0	16.0	16.0	16.0	14.3	12.4	9.8	16.0					
			55	16.0	16.0	16.0	16.0	16.0	14.2	16.0	15.3	11.6	10.4	9.0	7.1	15.3					
			70	16.0	16.0	16.0	16.0	14.2	11.2	16.0	12.0	9.1	8.1	7.1	5.6	12.0					
			85	16.0	16.0	15.0	13.4	11.7	9.2	13.4	9.9	7.5	6.7	5.8	4.6	9.9					
			100	16.0	16.0	12.8	11.4	9.9	7.8	11.4	8.4	6.4	5.7	4.9	3.9	8.4					
			110	16.0	15.3	11.6	10.4	9.0	7.1	10.4	7.6	5.8	5.2	4.5	3.5	7.6					
			120	16.0	14.0	10.6	9.5	8.3	6.5	9.5	7.0	5.3	4.7	4.1	3.2	7.0					

MASONRY ANCHOR SCHEDULE NOTES:

1. SPANS AND LOADS SHOWN HERE ARE FOR DETERMINING ANCHOR SPACING ONLY. ALLOWABLE STORM PANEL SPANS FOR SPECIFIC LOADS MUST BE LIMITED TO THOSE SHOWN IN THE SPAN TABLES.
2. SEE MOUNTING SECTION DETAILS FOR IDENTIFICATION OF CONNECTION TYPE.
3. TO USE THE ANCHOR SCHEDULE, FIRST DETERMINE THE DESIGN PRESSURE, SPAN AND CONNECTION TYPE FOR THE SPECIFIC OPENING BEING PROTECTED. ENTER ANCHOR SCHEDULE AT A LOAD EQUAL TO OR GREATER THAN THE REQUIREMENT AND A SPAN EQUAL TO OR GREATER THAN THE REQUIRMENT; USE THE ANCHOR SPACING LISTED FOR THE SPECIFIC CONNECTION TYPE AND ANCHOR SELECTED.
4. LINEAR INTERPOLATION IS ALLOWED FOR INTERMEDIATE FASTENER SPACING AND LOADS.
5. EXISTING STRUCTURE MAY BE CONCRETE, HOLLOW BLOCK OR WOOD FRAMING. REFER TO ANCHOR SCHEDULE FOR PROPER ANCHOR TYPE BASED ON TYPE OF EXISTING STRUCTURE.
6. ANCHORS SHALL BE INSTALLED IN ACCORDANCE WITH THE ANCHOR MANUFACTURER'S RECOMMENDATIONS.
7. MINIMUM EMBEDMENT AND EDGE DISTANCE EXCLUDES WALL FINISH, WALL COVERINGS, STUCCO AND SIMILAR MATERIALS.
8. WASHERED WINGNUTS AND LOCKNUTS SHALL BE INSTALLED SUCH THAT THE NUT IS FLUSH WITH THE THREADED STUD OR BOLT, MINIMUM. SIDEWALK SCREWS (WAFER HEAD SCREWS) SHALL HAVE MINIMUM OF 1/2" ENGAGEMENT OF THREADS IN BASE ANCHOR U.O.N.
9. DESIGNATES ANCHOR CONDITIONS WHICH ARE NOT ACCEPTABLE USES.
10. SEE THE COMPONENT DETAILS SHEET FOR LOCATION OF ANCHOR POINTS ON EACH TYPE OF MOUNTING HARDWARE.

Documents Prepared By:
RW BUILDING CONSULTANTS, INC.
P.O. Box 230 Valrico FL. 33595
Phone No.: 813.659.9197
Florida Board of Professional Engineers
Certificate Of Authorization No. 9813
5.31.12
Lyndon F. Schmidt, P.E. NO. 43409

PRODUCT: ELITE HURRICANE SHUTTERS GALV. STEEL STORM PANEL

PART OR ASSEMBLY: ANCHOR SCHEDULE - CONCRETE

NO.	DATE	REVISIONS	BY
1	05/22/12	UPDATE TO 2010 FBC	LFS

DATE: 2/4/08
SCALE: N.T.S.
DWG. BY: EW
CHK. BY: LFS
DRAWING NO.: FL-10106.2
SHEET 6 OF 9

© 2008 R.W. BUILDING CONSULTANTS INC.

ANCHOR SCHEDULE

FASTENER MAX. SPACING (IN.) REQ'D FOR VARIOUS DESIGN LOADS AND SPANS

EXISTING STRUCTURE	ANCHOR TYPE	INSTALLATION DETAILS: EDGE DISTANCE	LOAD PSF MAX. (SEE NOTE 1)	SPANS UP TO 53" (SEE NOTE 1) CONNECTION TYPE C1	C2	C3	C4	C5	C6	SPANS UP TO 84" (SEE NOTE 1) CONNECTION TYPE C1	C2	C3	C4	C5	C6	SPANS UP TO 106" (SEE NOTE 1) CONNECTION TYPE C1	C2	C3	C4	C5	C6	SPANS UP TO 144" (SEE NOTE 1) CONNECTION TYPE C1	C2	C3	C4	C5	C6
HOLLOW CONCRETE BLOCK	1/4"ø ITW TAPCON EM = 1.25" CL = 3.0"	ED = 2.5"	40	16.0	16.0	14.8	15.2	11.5	9.0	16.0	12.3	9.3	9.6	7.2	5.7	13.2	9.7	7.4	7.6	5.7	4.5	9.7					
			55	16.0	14.1	10.7	11.0	8.3	6.6	12.1	8.9	6.7	6.9	5.2	4.1	9.6	7.0	5.3	5.5	4.1	3.3	7.0					
			70	15.1	11.1	8.4	8.7	6.5	5.1	9.5	7.0	5.3	5.4	4.1	3.2	7.5	5.5	4.2	4.3	3.2							
			85	12.4	9.1	6.9	7.1	5.4	4.2	7.8	5.7	4.3	4.5	3.4		6.2	4.5	3.4	3.5								
			100	10.5	7.8	5.9	6.0	4.6	3.6	6.6	4.9	3.7	3.8			5.2	3.9		3.0								
			110	9.6	7.0	5.3	5.5	4.1	3.3	6.0	4.4	3.3	3.4			4.8	3.5										
			120	8.8	6.5	4.9	5.0	3.8	3.0	5.5	4.1	3.1	3.2			4.4	3.2										
	1/4"ø ELCO ULTRACON EM = 1.25" CL = 3.0"	ED = 2.5"	40	16.0	14.0	10.6	11.9	8.2	6.5	12.0	8.8	6.7	7.5	5.2	4.1	9.5	7.0	5.3	5.9	4.1	3.2	7.0					
			55	13.8	10.1	7.7	8.9	6.0	4.7	8.7	6.4	4.8	5.6	3.7		6.9	5.0	3.8	4.4	3.0							
			70	10.8	8.0	6.0	8.3	4.7	3.7	6.8	5.0	3.8	5.2			5.4	4.0	3.0	4.1								
			85	8.9	6.5	5.0	6.1	3.8	3.0	5.6	4.1	3.1	3.8			4.4	3.2		3.0								
			100	7.6	5.6	4.2	4.9	3.3		4.8	3.5		3.1			3.8											
			110	6.9	5.0	3.8	3.7	3.0		4.3	3.2					3.4											
			120	6.3	4.6	3.5	3.2			4.0						3.1											
	1/4"Ø ELCO MALE/ FEMALE "PANELMATE" EM = 1.25" CL = 3.0"	ED = 2.0"	40	16.0	16.0	16.0	16.0	16.0	12.6	16.0	16.0	13.0	13.9	10.1	7.9	16.0	13.6	10.3	11.0	8.0	6.3	13.1					
			55	16.0	16.0	15.0	16.0	11.6	9.2	16.0	12.4	9.4	10.4	7.3	5.8	13.4	9.8	7.5	8.2	5.8	4.6	9.5					
			70	16.0	15.5	11.8	15.4	9.1	7.2	13.3	9.8	7.4	9.7	5.7	4.5	10.5	7.7	5.9	7.7	4.5	3.6	7.4					
			85	16.0	12.8	9.7	11.3	7.5	5.9	10.9	8.0	6.1	7.1	4.7	3.7	8.6	6.4	4.8	5.6	3.7							
			100	14.7	10.8	8.2	9.1	6.4	5.0	9.3	6.8	5.2	5.7	4.0	3.1	7.3	5.4	4.1	4.5	3.2							
			110	13.4	9.8	7.5	6.9	5.8	4.6	8.4	6.2	4.7	4.3	3.6		6.7	4.9	3.7	3.4								
			120	12.3	9.0	6.8	6.0	5.3	4.2	7.7	5.7	4.3	3.8	3.3		6.1	4.5	3.4	3.0								
	1/4"Ø ITW DYNABOLT SLEEVE ANCHOR EM = 1.125" CL = 3.0"	ED = 1.5"	40	16.0	16.0	16.0	16.0	16.0	13.0	16.0	16.0	13.4	15.9	10.4	8.2	16.0	14.0	10.6	12.6	8.2	6.5	14.0					
			55	16.0	16.0	16.0	15.4	12.0	9.4	16.0	12.8	9.7	11.9	7.5	5.9	13.8	10.1	7.7	9.4	6.0	4.7	10.1					
			70	16.0	16.0	16.0	12.1	9.4	7.4	13.7	10.0	7.6	11.1	5.9	4.6	10.8	8.0	6.0	8.8	4.7	3.7	8.0					
			85	16.0	13.1	13.1	10.0	7.7	6.1	11.2	8.3	6.3	8.2	4.9	3.8	8.9	6.5	5.0	6.5	3.8	3.0	6.5					
			100	15.2	11.2	11.2	8.5	6.6	5.2	9.6	7.0	5.3	6.5	4.1	3.2	7.6	5.6	4.2	5.2	3.3							
			110	13.8	10.1	10.1	7.7	6.0	4.7	8.7	6.4	4.8	5.0	3.7		6.9	5.0	3.8	3.9	3.0							
			120	12.6	9.3	9.3	7.0	5.5	4.3	8.0	5.8	4.4	4.3	3.4		6.3	4.6	3.5	3.4								
	ALL POINTS 1/4"Ø SOLID SET EM = 0.875" CL = 3"	ED = 2.0"	40	16.0	16.0	16.0	16.0	16.0	13.3	16.0	16.0	13.7	12.1	10.6	8.4	16.0	14.3	10.8	9.6	8.4	6.6	14.3					
			55	16.0	16.0	15.7	14.4	12.2	9.6	16.0	13.1	9.9	9.1	7.7	6.1	14.1	10.4	7.8	7.2	6.1	4.8	10.4					
			70	16.0	16.0	12.4	13.5	9.6	7.6	14.0	10.3	7.8	8.5	6.0	4.8	11.1	8.1	6.2	6.7	4.8	3.8	8.1					
			85	16.0	13.4	10.2	9.9	7.9	6.2	11.5	8.4	6.4	6.2	5.0	3.9	9.1	6.7	5.1	4.9	3.9	3.1	6.7					
			100	15.5	11.4	8.6	7.9	6.7	5.3	9.8	7.2	5.4	5.0	4.2	3.3	7.7	5.7	4.3	3.9	3.3							
			110	14.1	10.4	7.8	6.0	6.1	4.8	8.9	6.5	4.9	3.8	3.8	3.0	7.0	5.2	3.9	3.0	3.0							
			120	12.9	9.5	7.2	5.3	5.6	4.4	8.1	6.0	4.5	3.3	3.5		6.4	4.7	3.6									

MASONRY ANCHOR SCHEDULE NOTES:

1. SPANS AND LOADS SHOWN HERE ARE FOR DETERMINING ANCHOR SPACING ONLY. ALLOWABLE STORM PANEL SPANS FOR SPECIFIC LOADS MUST BE LIMITED TO THOSE SHOWN IN THE SPAN TABLES.
2. SEE MOUNTING SECTION DETAILS FOR IDENTIFICATION OF CONNECTION TYPE.
3. TO USE THE ANCHOR SCHEDULE, FIRST DETERMINE THE DESIGN PRESSURE, SPAN AND CONNECTION TYPE FOR THE SPECIFIC OPENING BEING PROTECTED. ENTER ANCHOR SCHEDULE AT A LOAD EQUAL TO OR GREATER THAN THE REQUIREMENT AND A SPAN EQUAL TO OR GREATER THAN THE REQUIRMENT; USE THE ANCHOR SPACING LISTED FOR THE SPECIFIC CONNECTION TYPE AND ANCHOR SELECTED.
4. LINEAR INTERPOLATION IS ALLOWED FOR INTERMEDIATE FASTENER SPACING AND LOADS.
5. EXISTING STRUCTURE MAY BE CONCRETE, HOLLOW BLOCK OR WOOD FRAMING. REFER TO ANCHOR SCHEDULE FOR PROPER ANCHOR TYPE BASED ON TYPE OF EXISTING STRUCTURE.
6. ANCHORS SHALL BE INSTALLED IN ACCORDANCE WITH THE ANCHOR MANUFACTURER'S RECOMMENDATIONS.
7. MINIMUM EMBEDMENT AND EDGE DISTANCE EXCLUDES WALL FINISH, WALL COVERINGS, STUCCO AND SIMILAR MATERIALS.
8. WASHERED WINGNUTS AND LOCKNUTS SHALL BE INSTALLED SUCH THAT THE NUT IS FLUSH WITH THE THREADED STUD OR BOLT, MINIMUM. SIDEWALK SCREWS (WAFER HEAD SCREWS) SHALL HAVE MINIMUM OF 1/2" ENGAGEMENT OF THREADS IN BASE ANCHOR U.O.N.
9. DESIGNATES ANCHOR CONDITIONS WHICH ARE NOT ACCEPTABLE USES.
10. SEE THE COMPONENT DETAILS SHEET FOR LOCATION OF ANCHOR POINTS ON EACH TYPE OF MOUNTING HARDWARE.

Documents Prepared By:
RW BUILDING CONSULTANTS, INC.
P.O. Box 230 Valrico FL 33595
Phone No.: 813.659.9197
Florida Board of Professional Engineers
Certificate Of Authorization No. 9813
Lyndon F. Schmidt, P.E. NO. 43409

PRODUCT: ELITE HURRICANE SHUTTERS GALV. STEEL STORM PANEL

PART OR ASSEMBLY: ANCHOR SCHEDULE - HOLLOW BLOCK

NO.	DATE	REVISIONS	BY
1	05/22/12	UPDATE TO 2010 FBC	LFS

DATE: 2/4/08
SCALE: N.T.S.
DWG. BY: EW
CHK. BY: LFS
DRAWING NO.: FL-10106.2
SHEET 7 OF 9

© 2008 R.W. BUILDING CONSULTANTS INC.

ANCHOR SCHEDULE

FASTENER MAX. SPACING (IN.) REQ'D FOR VARIOUS DESIGN LOADS AND SPANS

EXISTING STRUCTURE	ANCHOR TYPE	INSTALLATION DETAILS																					
		LOAD PSF MAX. (SEE NOTE 1)	SPANS UP TO 53" (SEE NOTE 1)						SPANS UP TO 106" (SEE NOTE 1)						SPANS UP TO 144" (SEE NOTE 1)					
			CONNECTION TYPE						CONNECTION TYPE						CONNECTION TYPE					
			C1	C2	C3	C4	C5	C6	C1	C2	C3	C4	C5	C6	C1	C2	C3	C4	C5	C6
WOOD (G >= 0.55) (SOUTHERN YELLOW PINE)	1/4"Ø ELCO MALE/ FEMALE "PANELMATE" EM = 1.88" CL = 3.0"	40	16.0	16.0	16.0	16.0	16.0	16.0	16.0	16.0	16.0	13.6	16.0	15.3	16.0					
		55	16.0	16.0	16.0	16.0	16.0	16.0	16.0	16.0	16.0	9.8	14.1	11.1	16.0					
		70	16.0	16.0	16.0	15.5	16.0	16.0	16.0	16.0	14.2	7.7	11.0	8.7	16.0					
		85	16.0	16.0	16.0	12.8	16.0	14.4	16.0	15.4	11.7	6.4	9.1	7.2	15.4					
		100	16.0	16.0	16.0	10.8	15.5	12.2	16.0	13.1	9.9	5.4	7.7	6.1	13.1					
		110	16.0	16.0	16.0	9.8	14.1	11.1	16.0	11.9	9.0	4.9	7.0	5.5	11.9					
		120	16.0	16.0	16.0	9.0	12.9	10.2	14.8	10.9	8.3	4.5	6.4	5.1	10.9					
	1/4"Ø LAG SCREW EM = 1.88" CL = 2.0"	40	16.0	16.0	16.0	16.0	16.0	16.0	16.0	16.0	16.0	8.1	16.0	14.4	16.0					
		55	16.0	16.0	16.0	11.8	16.0	16.0	16.0	16.0	16.0	5.9	13.3	10.5	16.0					
		70	16.0	16.0	16.0	9.2	16.0	16.0	16.0	16.0	13.4	4.6	10.4	8.2	16.0					
		85	16.0	16.0	16.0	7.6	16.0	13.6	16.0	14.6	11.0	3.8	8.6	6.8	14.6					
		100	16.0	16.0	16.0	6.4	14.6	11.5	16.0	12.4	9.4	3.2	7.3	5.7	12.4					
		110	16.0	16.0	16.0	5.9	13.3	10.5	15.3	11.2	8.5	2.9	6.6	5.2	11.2					
		120	16.0	16.0	15.7	5.4	12.2	9.6	14.0	10.3	7.8	2.7	6.1	4.8	10.3					
	1/4"Ø WOOD SCREW EM = 1.88" CL = 2.0"	40	16.0	16.0	16.0	14.5	16.0	16.0	16.0	16.0	14.8	7.2	11.5	9.1	16.0					
		55	16.0	16.0	16.0	10.6	16.0	13.2	16.0	14.2	10.8	5.3	8.4	6.6	14.2					
		70	16.0	16.0	16.0	8.3	13.2	10.4	15.2	11.2	8.5	4.1	6.6	5.2	11.2					
		85	16.0	16.0	14.0	6.8	10.8	8.5	12.5	9.2	7.0	3.4	5.4	4.2	9.2					
		100	16.0	15.6	11.9	5.8	9.2	7.2	10.6	7.8	5.9	2.9	4.6	3.6	7.8					
		110	16.0	14.2	10.8	5.3	8.4	6.6	9.6	7.1	5.4	2.6	4.2	3.3	7.1					
		120	16.0	13.0	9.9	4.8	7.7	6.0	8.8	6.5	4.9	2.4	3.8	3.0	6.5					
	1/4"Ø SMS EM = 1.88" CL = 2.0"	40	16.0	16.0	16.0	14.5	16.0	16.0	16.0	16.0	14.8	7.2	11.5	9.1	16.0					
		55	16.0	16.0	16.0	10.6	16.0	13.2	16.0	14.2	10.8	5.3	8.4	6.6	14.2					
		70	16.0	16.0	16.0	8.3	13.2	10.4	15.2	11.2	8.5	4.1	6.6	5.2	11.2					
		85	16.0	16.0	14.0	6.8	10.8	8.5	12.5	9.2	7.0	3.4	5.4	4.2	9.2					
		100	16.0	15.6	11.9	5.8	9.2	7.2	10.6	7.8	5.9	2.9	4.6	3.6	7.8					
		110	16.0	14.2	10.8	5.3	8.4	6.6	9.6	7.1	5.4	2.6	4.2	3.3	7.1					
		120	16.0	13.0	9.9	4.8	7.7	6.0	8.8	6.5	4.9	2.4	3.8	3.0	6.5					

EM = MINIMUM EMBEDMENT (PENETRATION)
CL = MINIMUM CENTER TO CENTER ANCHOR SPACING

WOOD ANCHOR SCHEDULE NOTES:

1. SPANS AND LOADS SHOWN HERE ARE FOR DETERMINING ANCHOR SPACING ONLY. ALLOWABLE STORM PANEL SPANS FOR SPECIFIC LOADS MUST BE LIMITED TO THOSE SHOWN IN THE SPAN TABLES.
2. SEE MOUNTING SECTION DETAILS FOR IDENTIFICATION OF CONNECTION TYPE.
3. TO USE THE ANCHOR SCHEDULE, FIRST DETERMINE THE DESIGN PRESSURE, SPAN AND CONNECTION TYPE FOR THE SPECIFIC OPENING BEING PROTECTED. ENTER ANCHOR SCHEDULE AT A LOAD EQUAL TO OR GREATER THAN THE REQUIREMENT AND A SPAN EQUAL TO OR GREATER THAN THE REQUIRMENT; USE THE ANCHOR SPACING LISTED FOR THE SPECIFIC CONNECTION TYPE AND ANCHOR SELECTED.
4. LINEAR INTERPOLATION IS ALLOWED FOR INTERMEDIATE FASTENER SPACING AND LOADS.
5. EXISTING STRUCTURE MAY BE CONCRETE, HOLLOW BLOCK OR WOOD FRAMING. REFER TO ANCHOR SCHEDULE FOR PROPER ANCHOR TYPE BASED ON TYPE OF EXISTING STRUCTURE.
6. ANCHORS SHALL BE INSTALLED IN ACCORDANCE WITH THE ANCHOR MANUFACTURER'S RECOMMENDATIONS.
7. MINIMUM EMBEDMENT AND EDGE DISTANCE EXCLUDES WALL FINISH, WALL COVERINGS, STUCCO AND SIMILAR MATERIALS.
8. WASHERED WINGNUTS AND LOCKNUTS SHALL BE INSTALLED SUCH THAT THE NUT IS FLUSH WITH THE THREADED STUD OR BOLT, MINIMUM. SIDEWALK SCREWS (WAFER HEAD SCREWS) SHALL HAVE MINIMUM OF 1/2" ENGAGEMENT OF THREADS IN BASE ANCHOR U.O.N.
9. DESIGNATES ANCHOR CONDITIONS WHICH ARE NOT ACCEPTABLE USES.
10. SEE THE COMPONENT DETAILS SHEET FOR LOCATION OF ANCHOR POINTS ON EACH TYPE OF MOUNTING HARDWARE.
10. ANCHORS INSTALLED INTO THE 1.5" FACE OF 2X FRAMING SHALL BE IN THE CENTER OF THE 1.5" FACE (.75" EDGE DISTANCE). ANCHORS SHALL BE A MINIMUM OF 2" FROM ENDS OF 2X FRAMING.
11. FOR CONNECTION TYPE "C4", ANCHORS SHALL BE INSTALLED A MINIMUM OF 1" FROM THE LOADED EDGE OF 2X FRAMING AND A MINIMUM OF 2" FROM THE ENDS OF 2X FRAMING.
12. FIELD VERIFY THAT ANCHORS ARE INTO ADEQUATE STRUCTURAL WOOD FRAMING MEMBERS AND NOT INTO PLYWOOD, OSB OR OTHER SIMILAR MATERIALS.
13. SPECIFIC GRAVITY (G = 0.55) IS FOR SOUTHERN YELLOW PINE.

Documents Prepared By:
RW BUILDING CONSULTANTS, INC.
P.O. Box 230 Valrico FL. 33595
Phone No.: 813.659.9197
Florida Board of Professional Engineers
Certificate Of Authorization No. 9813
Lyndon F. Schmidt, P.E. NO. 43409
5.31.12

PRODUCT: ELITE HURRICANE SHUTTERS GALV. STEEL STORM PANEL

PART OR ASSEMBLY: ANCHOR SCHEDULE - WOOD

NO.	DATE	REVISIONS	BY
1	05/22/12	UPDATE TO 2010 FBC	LFS

DATE: 2/4/08
SCALE: N.T.S.
DWG. BY: EW
CHK. BY: LFS
DRAWING NO.: FL-10106.2
SHEET 8 OF 9

© 2008 R.W. BUILDING CONSULTANTS INC.

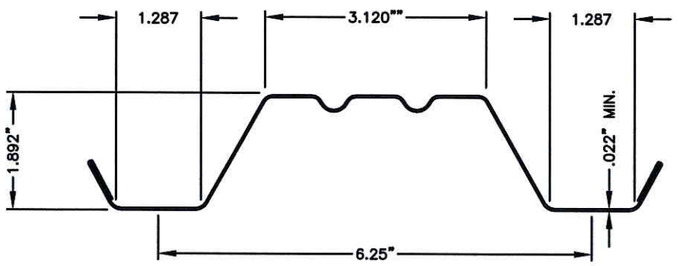

1A GALV. STEEL STORM 1/2 PANEL PROFILE

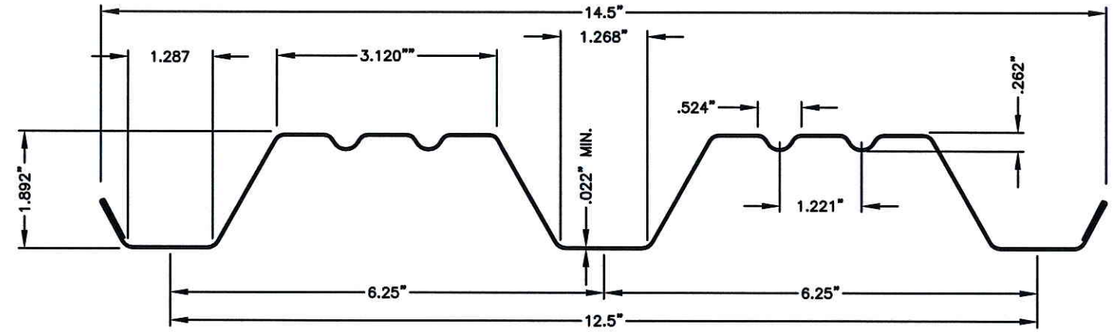

1 GALV. STEEL STORM PANEL PROFILE

ITEM	DESCRIPTION	MATERIAL
1	GALV. STEEL STORM PANEL (0.022" MIN. THK) ASTM A653 SS GRADE 80, Fy = 80 KSI MIN.	STEEL
1A	GALV. ST'L STORM 1/2 PANEL (0.022" MIN. THK.) ASTM A653 SS GRADE 80, Fy = 80 KSI MIN.	STEEL
2	"h" HEADER	ALUMINUM
3	EXPANDED "U" HEADER	ALUMINUM
5	2" x 2" ANGLE	ALUMINUM
6	"F" TRACK	ALUMINUM
6A	1" BUILD-OUT "F" TRACK	ALUMINUM
6B	2" BUILD-OUT "F" TRACK	ALUMINUM
8	WASHERED WINGNUT	STEEL
9	1/4-20 x 3/4" H.H. BOLT	S.S.
10	1" BUILD OUT "F" HEADER	ALUMINUM
10A	2" BUILD OUT "F" HEADER	ALUMINUM
13	1/4"-20 x 3/4" KNURLED STUD	S.S.
14	1/4"-20 SIDEWALK BOLT	S.S.

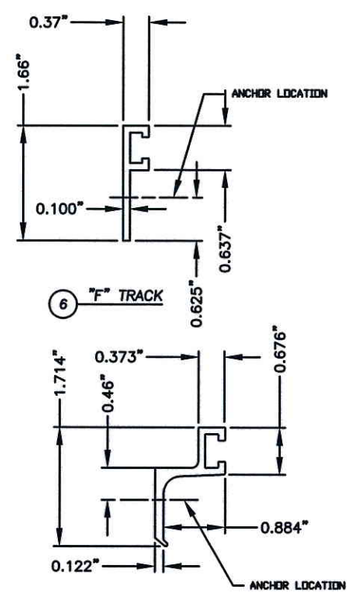

6 "F" TRACK

6A "1" BUILD OUT "F" TRACK

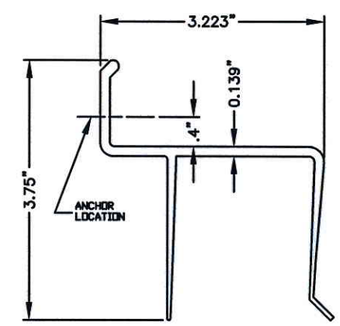

10 "1" BUILD OUT "F" HEADER

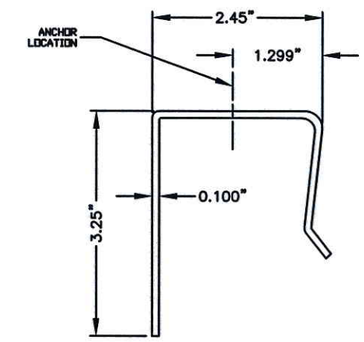

3 EXPANDED "U" HEADER

14 SIDEWALK BOLT

9 H.H. BOLT

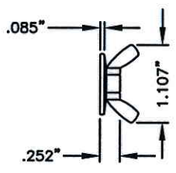

8 WING NUT

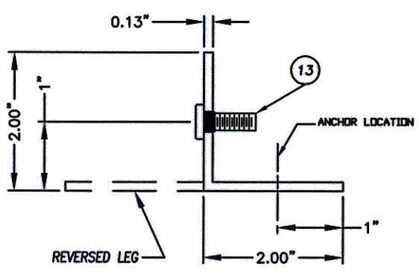

5 ANGLE

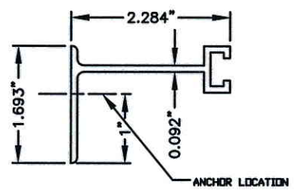

6B "2" BUILD OUT "F" TRACK

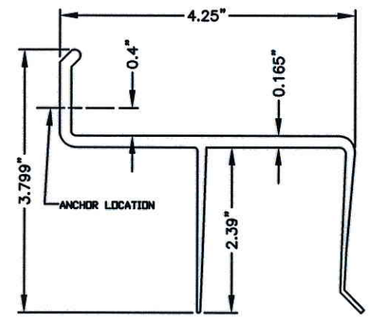

10A "2" BUILD OUT "F" HEADER

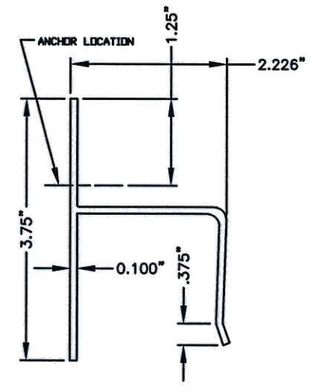

2 "h" HEADER

Documents Prepared By:
RW BUILDING CONSULTANTS, INC.
P.O. Box 230 Valrico FL 33595
Phone No.: 813.659.9197
Florida Board of Professional Engineers
Certificate Of Authorization No. 9813
Lyndon F. Schmidt, P.E. NO. 43409

PRODUCT: ELITE HURRICANE SHUTTERS GALV. STEEL STORM PANEL

PART OR ASSEMBLY: BILL OF MATERIALS & COMPONENTS

NO.	DATE	REVISIONS	BY
1	05/22/12	UPDATE TO 2010 FBC	LFS

DATE: 2/4/08
SCALE: N.T.S.
DWG. BY: WH
CHK. BY: LFS
DRAWING NO.: FL-10106.2
SHEET 9 OF 9

© 2008 R.W. BUILDING CONSULTANTS INC.

R:\A - Projects\Project Folders\Proj 1301-1400\PF 1304\D. RWBC Drawings\2010 FBC\FL-10106.dwg, 9.2